Footprints

Component	Data sheet	What I Have
ESP32-C3-MINI-1	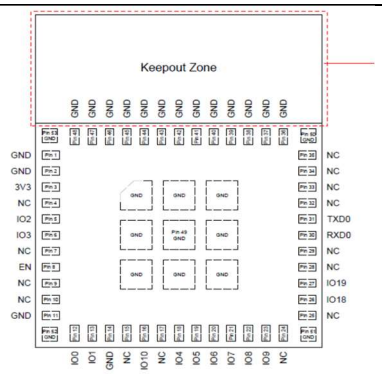	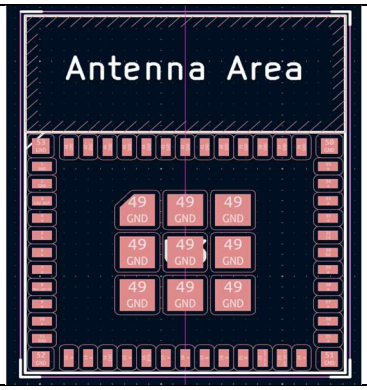
The ESP32-C3-MINI-1 footprint Matches the datasheet. The footprint was provided by the official espressif esp32 library.		
BAT-HLD-003-SMT-TR	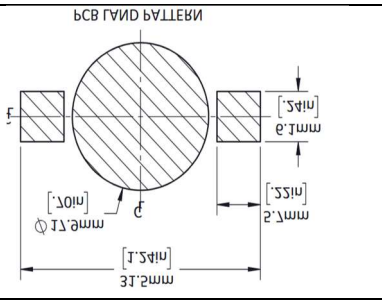	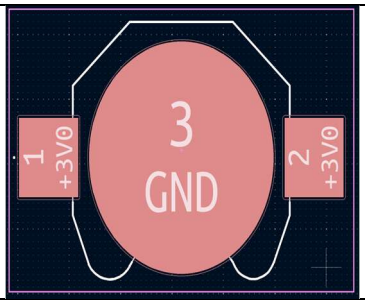
The Battery holder footprint Matches the datasheet. The footprint was gotten from Mouser electronics as BAT-HLD-003-SMT library.		
AO3407A	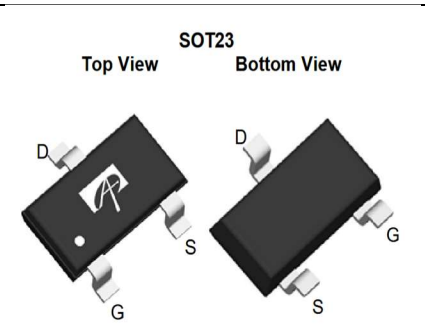	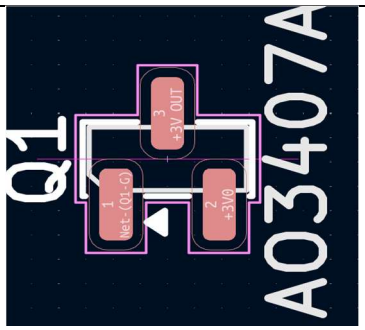
The AO3407A footprint Matches the datasheet. The footprint used was the generic SOT-23 provided by kicad. From the diagram the drain matches the 3v_out (output), the source matches the 3v (input) and the gate matches the net list to the resistor and finally ground… just like it was in the schematics		

TJ-S1615CY6TGLCCSRGB-A5	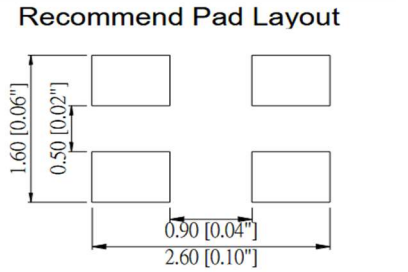	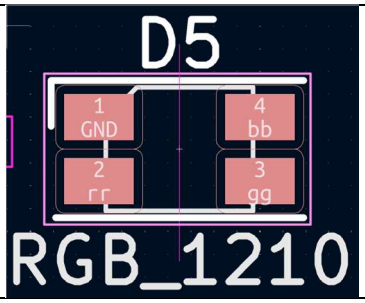

The RGB LED size was upgraded to 3.2 mm × 2.5 mm from the 1.8 mm x 1.6 mm initially suggested in the component list. A generic Kicad 1210 common cathode RGB footprint was added RGB symbol. However, the footprint Matches the datasheet for 1210 components like TJ-S1615CY6TGLCCSRGB-A5.

TL3342F160QG/TR	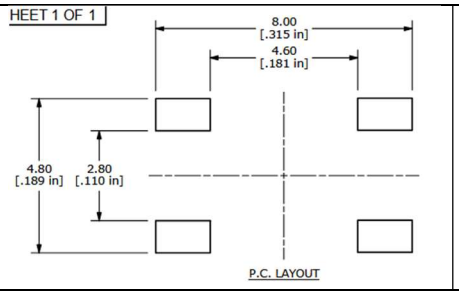	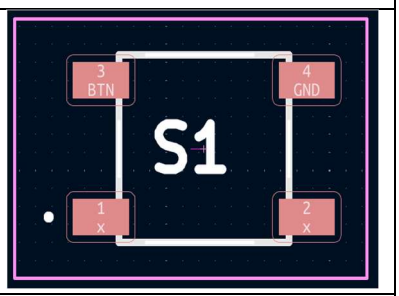

The button footprint Matches the datasheet. The footprint was gotten from Mouser electronics as TL3342F160QG library.

S8050/SS8050	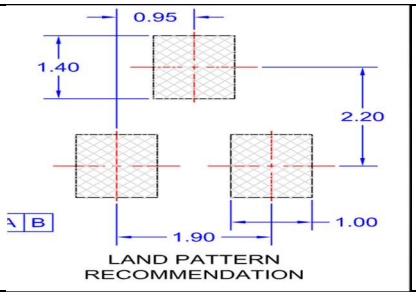	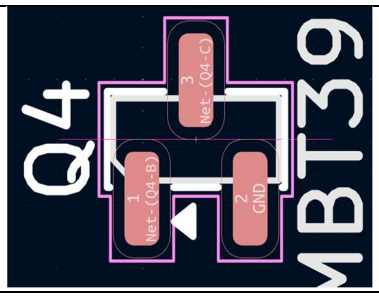

The NPN transistor footprint Matches the S8050 component datasheet. The footprint used was the generic SOT-23 provided by Kicad.

0402 Resistor and capacitor		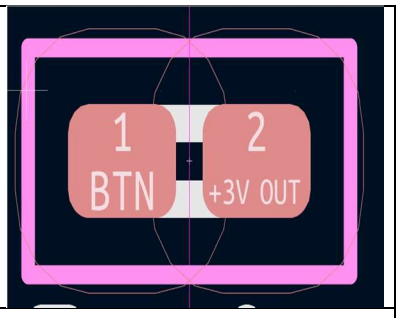
The footprint used for 0402 resistor and capacitors was the generic 0402 provided by Kicad.		